This drawing and the information contained herein are the confidential and proprietary property of Global Supply LLC

PART NUMBER	LENGTH
010632F037PC	**3/8**
010632F050PC	**1/2**
010632F062PC	**5/8**
010632F075PC	**3/4**

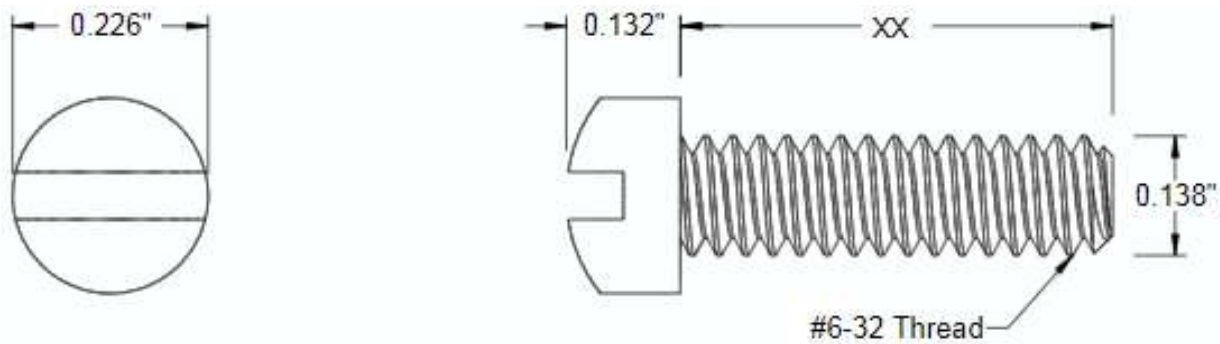

NOTES:
1. INTERPRET DRAWINGS PER ASME Y14.5M-1994 STANDARD.
2. DIMENSIONS & TOLERANCES PER ANSI/ASME B18.6.3.
3. ROHS AND REACH COMPLIANT

DRAWING SCALE: **STANDARD**	**MATERIAL:** **NYLON**	**DESCRIPTION:** **6-32 SLOTTED FILLISTER HEAD MACHINE SCREW**
TOLERANCES: *Unless specified otherwise, all dimensions are in inches* — **x.xxx +/- 0.005**, **x.xx +/- 0.010**, **x.x +/- 0.010**	**FINISH:** **PLAIN**	**PART NUMBER:** **010632F0XXPC**
DRAWN BY: L CLARY	FSCM No. 67012	Global Supply LLC — Worldwide supplier of Electronic Hardware, Fasteners & Components

REV:	APPROVAL	DATE:
INITIAL RELEASE	LJA	**Jul 13, 2018**

ECCN
EAR99 = NLR (No License Required)

500 Division Street, Campbell, CA 95008-6906
Tel: 408 960 0370 Fax: 408 960 0375 Web: www.globalsupply.com